Slotted IR Opto-Coupler Module

This Slotted IR Opto-Coupler can be used as speed counter or detect objects passing through. You can use it with a disc encoder to make a RPM counter. There is an on board LED that will show the trigger status of the sensor. When sensor slot is blocked, digital output will become high and LED will turn off, vice versa when sensor is not blocked, digital output will be low and LED will turn on. The on board comparator IC to ensure there is no hysteresis of switching On & Off.

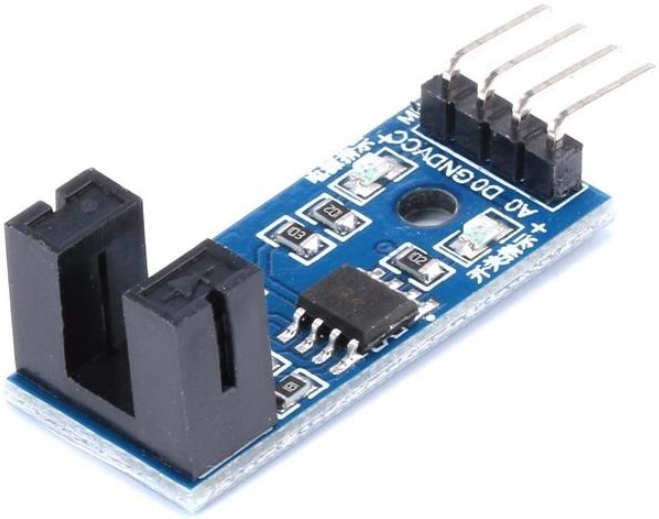

SKU: SSR1027

Brief Data:

- Operating Voltage: 3.3~5Vdc.
- Output:
  - Digital (D0) – TTL switching signal output.
  - Analog (A0) – Opto-Coupler collector output.
- Groove Width: 5mm.
- Fixing Screw Hole: M3.
- On board LED sensor status indicator.
- On board LM393 comparator for high sensitivity.
- Dimensions: 31 x 14 x 13mm.

Mechanical Dimension:

Unit: mm

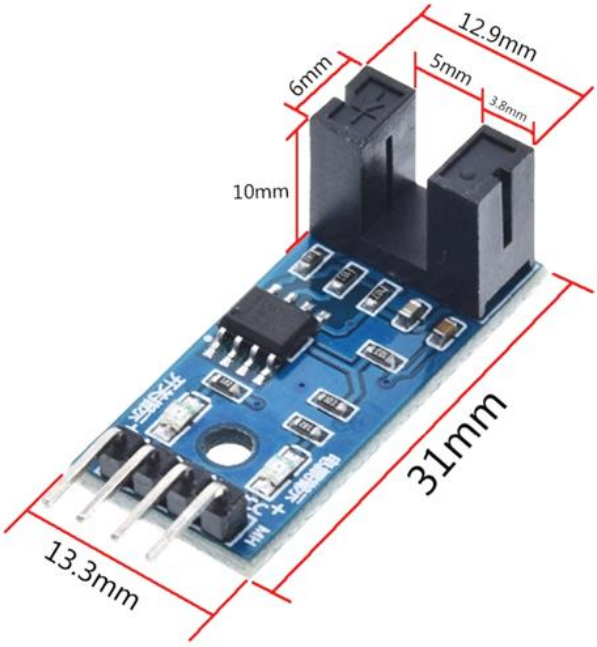

Schematic Diagram:

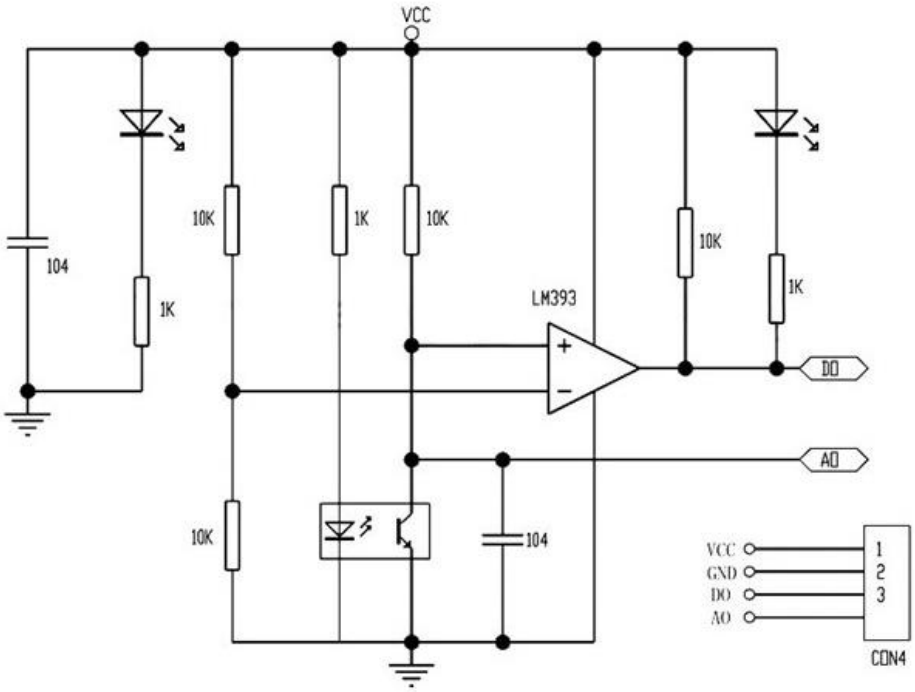

HandsOn Technology provides a multimedia and interactive platform for everyone interested in electronics. From beginner to diehard, from student to lecturer. Information, education, inspiration and entertainment. Analog and digital, practical and theoretical; software and hardware.

open source hardware

Hands*On* Technology support Open Source Hardware (OSHW) Development Platform.

Learn : Design : Share

www.handsontec.com

The Face behind our product quality…

In a world of constant change and continuous technological development, a new or replacement product is never far away – and they all need to be tested.

Many vendors simply import and sell wihtout checks and this cannot be the ultimate interests of anyone, particularly the customer. Every part sell on Handsotec is fully tested. So when buying from Handsontec products range, you can be confident you're getting outstanding quality and value.

We keep adding the new parts so that you can get rolling on your next project.



Breakout Boards & Modules



Connectors



Electro-Mechanical Parts



Engineering Material



Mechanical Hardware



Electronics Components



Power Supply



Arduino Board & Shield



Tools & Accessory