FARES PCB
For Electronic Solutions

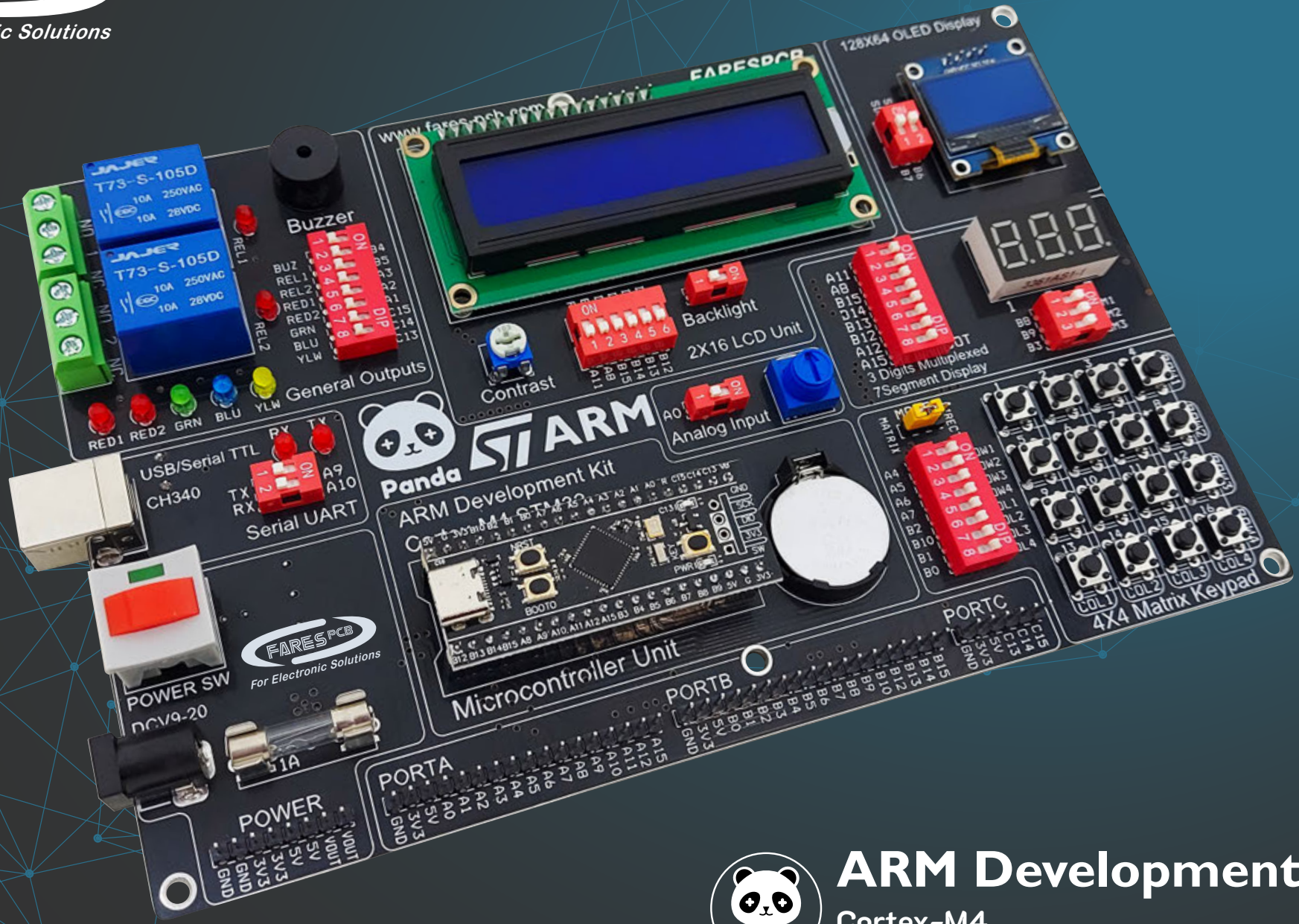

ARM Development Kit

Cortex-M4

STM32F401RCT6

General Description

Panda+ Kit paves the way for beginners in discovering ARM processor-based embedded systems. It is based on the popular and cheap module Black Pill which features 32-Bit ARM Cortex M4 microprocessor (STM32F401RCT6) running at 84MHz with 256KB of flash memory, 64KB of SRAM, and has an extensive range of I/O and peripherals.

STM32F401RCT6 Features

Core : 32-Bit Cortex-M4
CPU frequency : 84MHz
Memory : 256KB flash , 64KB SRAM
GPIOs : 81
Timers : 6X16 bit + 2X32 bit
Analog : 10 (12-Bit)
Peripherals : 3XUSART , 4XSPI , 3XI^2C , CAN 2.0 , USB 2.0 full speed device/host

This manual explains kit sections and shows how it can be programmed in brief.

Features

- Supports Cortex-M4 (STM32F401RCT6)
- USB or adaptor powered
- 16 Input switchs with two operating modes
- Output unit involves
    - Five output LEDs
    - Two output relays with LED indicators
    - one output buzzer
- 2X16 Character LCD with contrast and backlight control
- 128X64 I²C OLED display
- Three digits 7segment display
- Analog input
- USB/TTL serial converter CH340
- All GPIOs are brought out to pin header

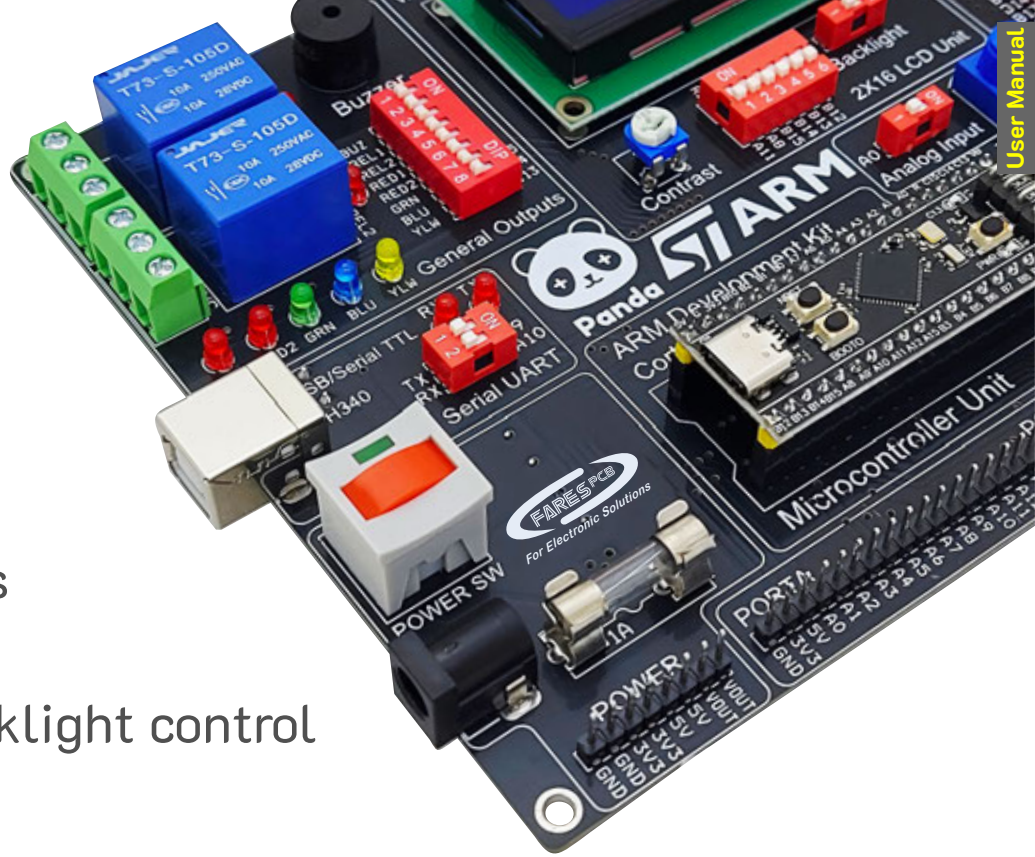

Kit Sections

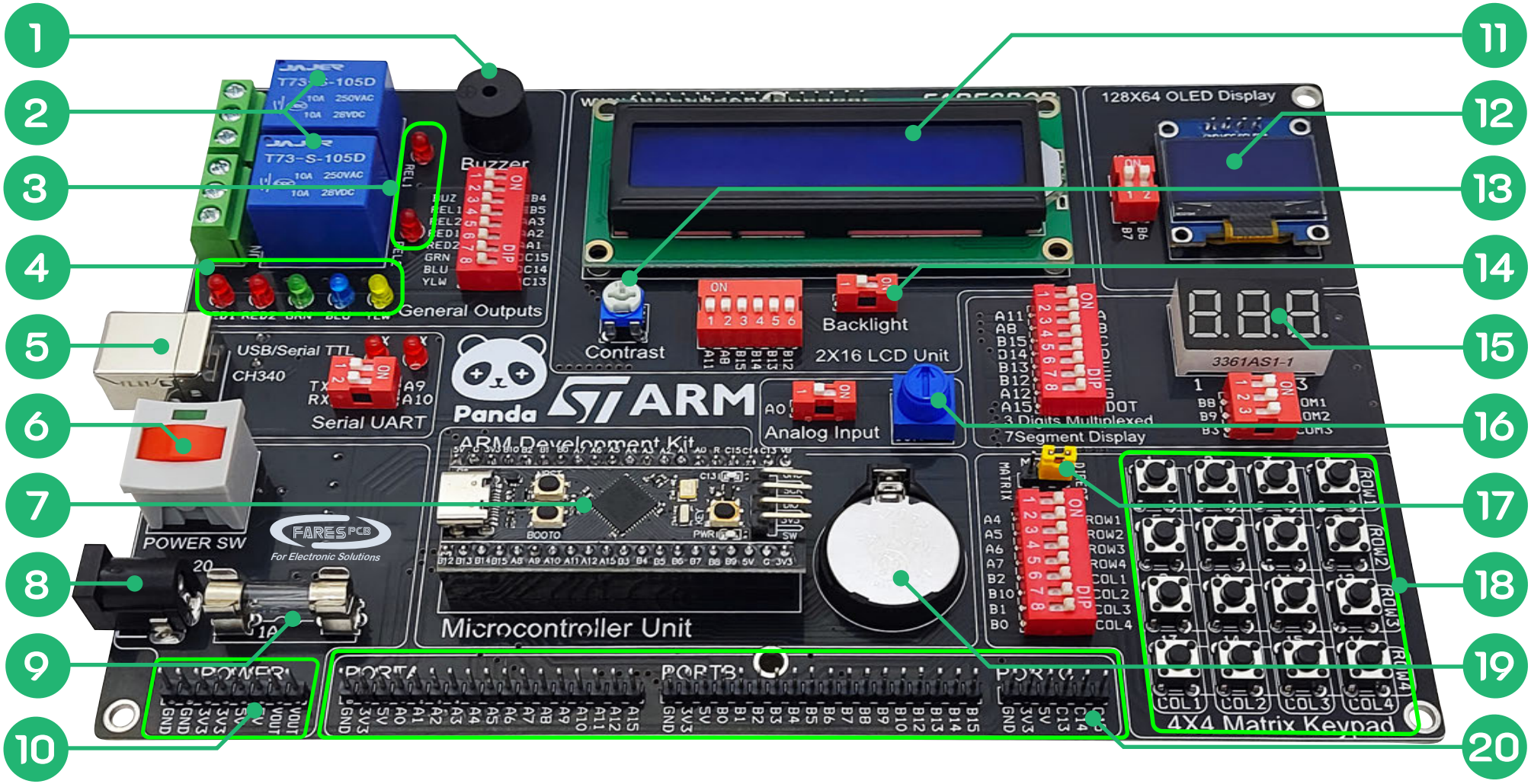

FARES PCB

1 - 5V Buzzer

2 - 2X 10 Ampere relay

3 - LED indicator for relays

4 - Different color output LEDs

5 - USB type B interface

6 - Power switch

7 - Black Pill module

8 - 2.1mm DC power socket

9 - 1A Fuse

10 - Power over header pins

11 - 2X16 LCD Display

12 - 128X64 OLED Display

13 - LCD contrast control

14 - Backlight control

15 - Three digits 7-segment display

16 - 10 KΩ high precision pot

17 - Keypad mode select jumper

18 - 16 Switch keypad

19 - CR2032 lithium battery

20 - GPIOs to pin header

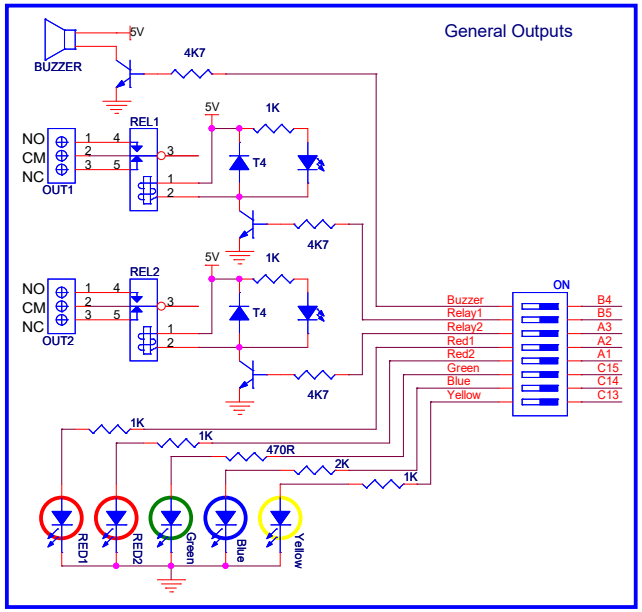
General Outputs
BUZZER
4K7
REL1
REL2
OUT1
OUT2
T4
1K
470R
2K
RED1
RED2
Green
Blue
Yellow
Buzzer
Relay1
Relay2
Red1
Red2
Green
Blue
Yellow
B4
B5
A3
A2
A1
C15
C14
C13

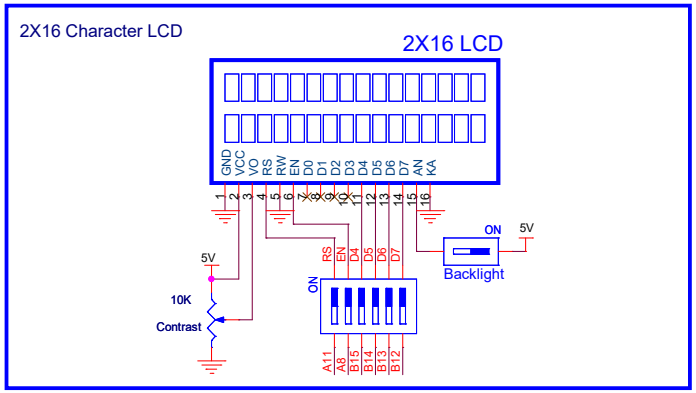
2X16 Character LCD
2X16 LCD
GND VCC VO RS RW EN D0 D1 D2 D3 D4 D5 D6 D7 AN KA
10K
Contrast
Backlight
ON
5V

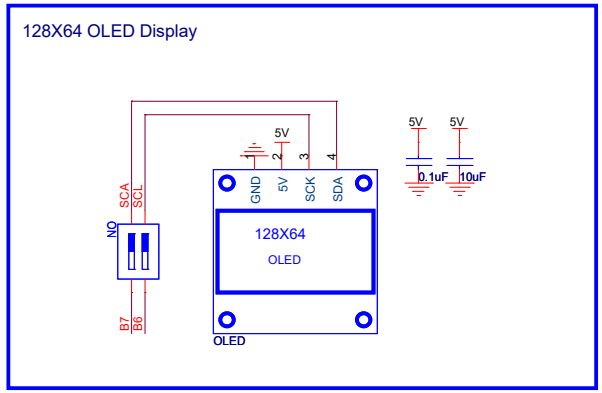
128X64 OLED Display
128X64
OLED
SCA
SCL
SCK
SDA
0.1uF
10uF

Panda

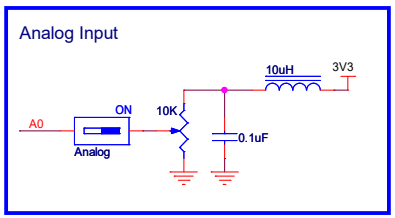
Analog Input
A0
ON
10K
Analog
10uH
3V3
0.1uF

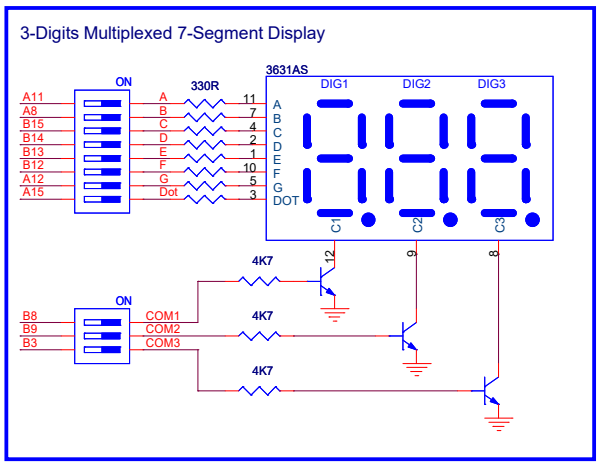
3-Digits Multiplexed 7-Segment Display
3631AS
DIG1
DIG2
DIG3
330R
4K7
COM1
COM2
COM3
Dot
DOT

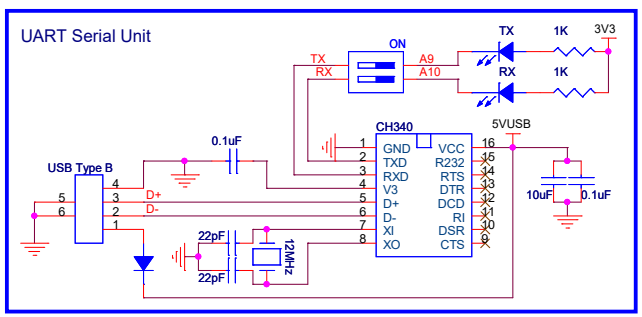
UART Serial Unit
USB Type B
CH340
GND
TXD
RXD
V3
D+
D-
XI
XO
VCC
R232
RTS
DTR
DCD
RI
DSR
CTS
TX
RX
5VUSB
0.1uF
10uF
22pF
12MHz

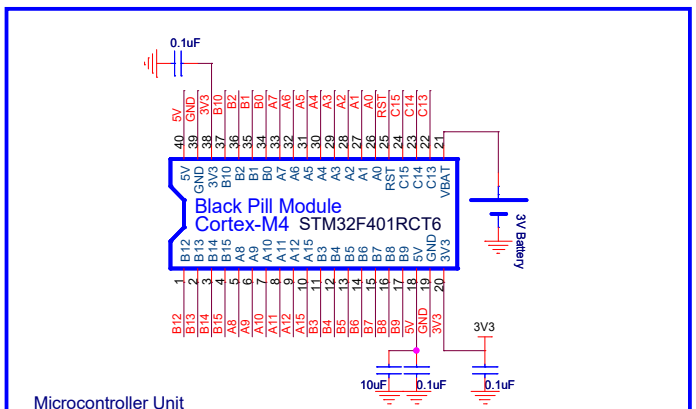
Microcontroller Unit
Black Pill Module
Cortex-M4 STM32F401RCT6
3V Battery
0.1uF
10uF
3V3

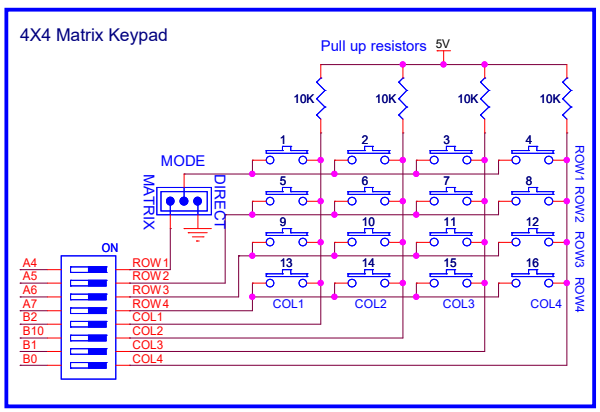
4X4 Matrix Keypad
Pull up resistors
10K
MODE
MATRIX
DIRECT
ROW1
ROW2
ROW3
ROW4
COL1
COL2
COL3
COL4

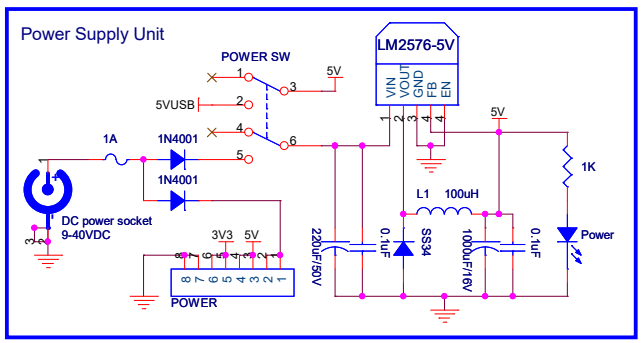
Power Supply Unit
POWER SW
LM2576-5V
VIN
VOUT
GND
FB
EN
5VUSB
1A
1N4001
DC power socket
9-40VDC
L1
100uH
SS34
220uF/50V
100uF/16V
0.1uF
1K
Power
POWER

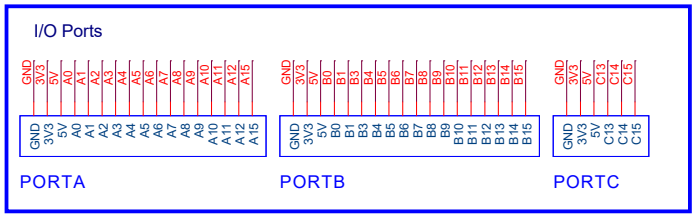
I/O Ports
PORTA
PORTB
PORTC

FARES PCB

Power Supply Unit

Panda+ Kit can be powered from DC power supply adaptor (9-40V) via DC power socket or from power source over USB type B connector. Also, it can be powered directly from Black Pill module via USB type C connector.

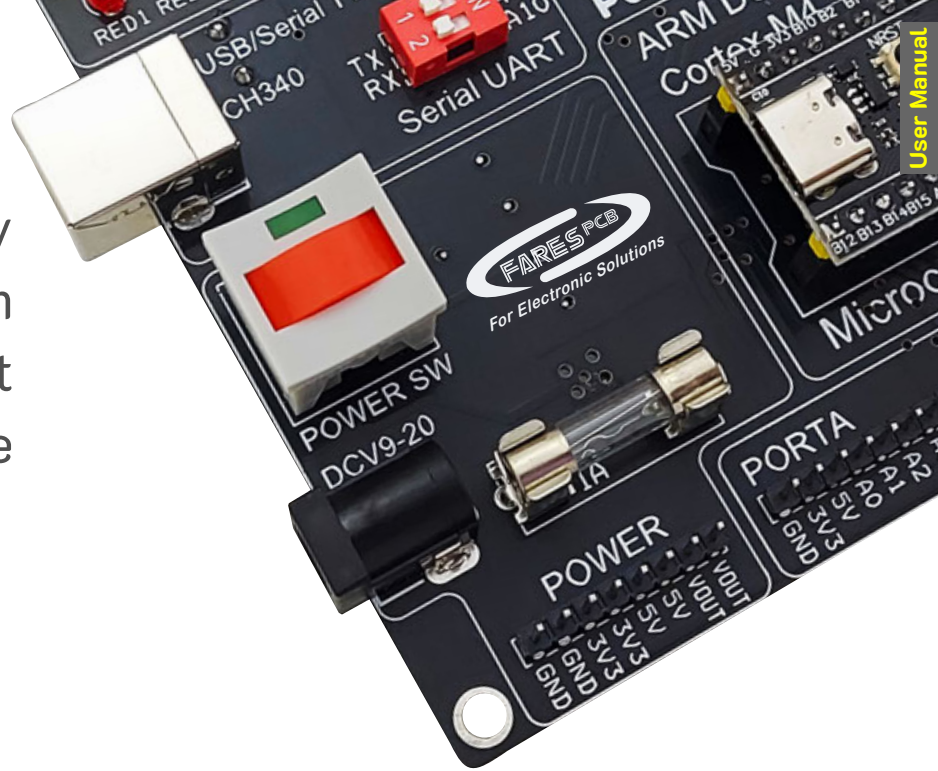

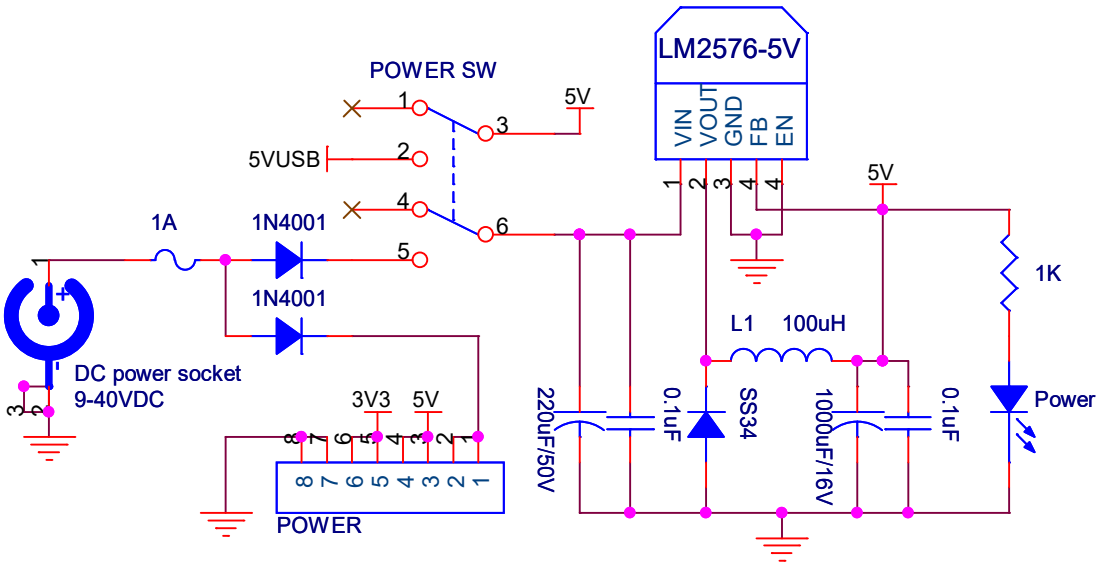

FARES PCB

PSU Specifications

- On/Off power switch
- Green LED for power indication
- 1A fuse for over-current protection
- On-board 5V switch regulator LM2576-5V
- Input voltage and on-board generated voltages are available for external usage via pin header
- On-board reverse current protection diode for safe operation

Microcontroller Unit

Panda+ Kit supports Black Pill module which is based on 32-bit ARM Cortex-M4 microcontroller STM32F401RCT6.

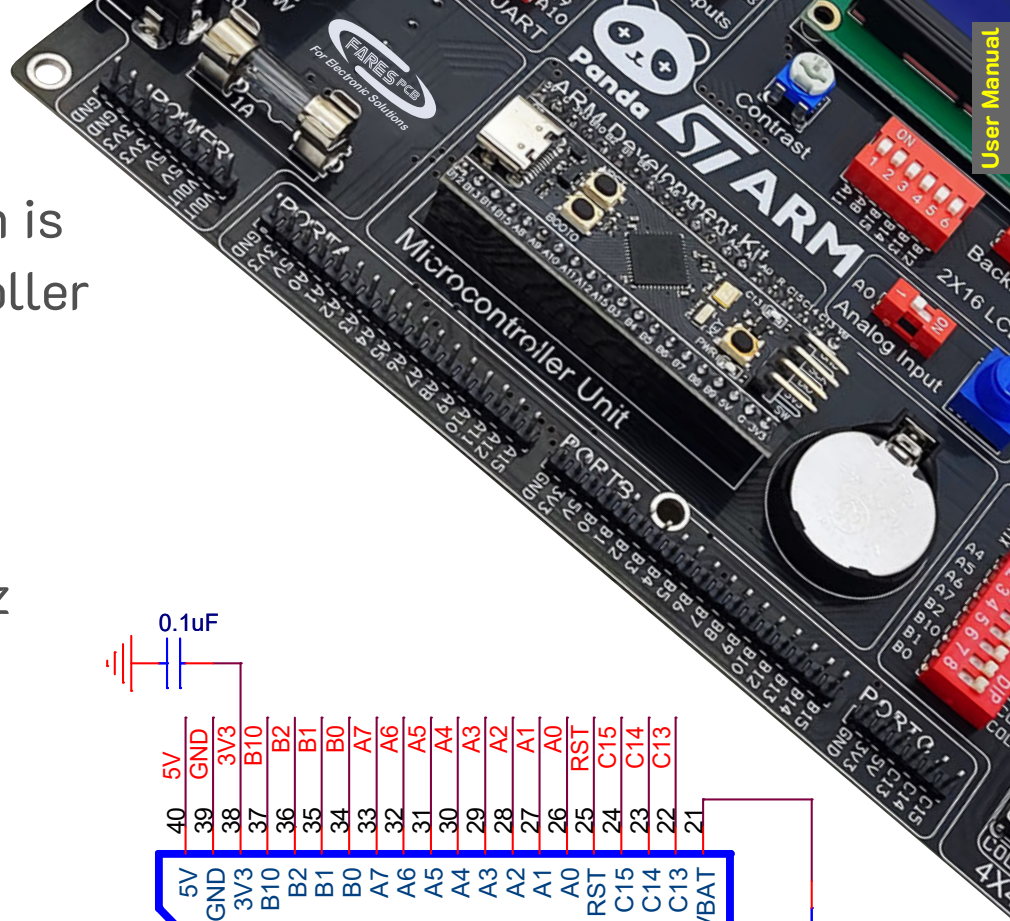

Black Pill Features

- STM32F401RCT6 ARM Cortex-M4 , 84MHz
- 256KB Flash memory, 64KB SRAM
- 32.768KHz crystal for RTC
- USB type C connector
- On-board 3.3V/300mA regulator
- On-board Reset switch and power indicator LED

A 3.3V lithium battery plugged on battery holder is included to power the internal RTC circuitry of microcontroller

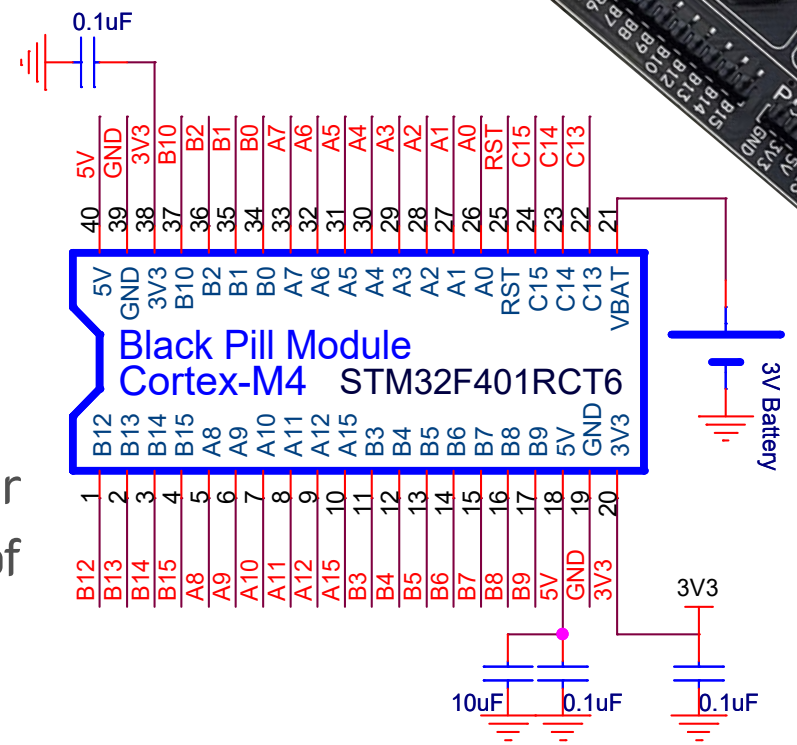

FARES PCB

Keypad Unit

Panda+ Kit contains 16 push-button switches configured as four rows intersected by four columns. Each intersection creates a switch position. Microcontroller can scan switches using one of two modes (matrix mode or direct mode).

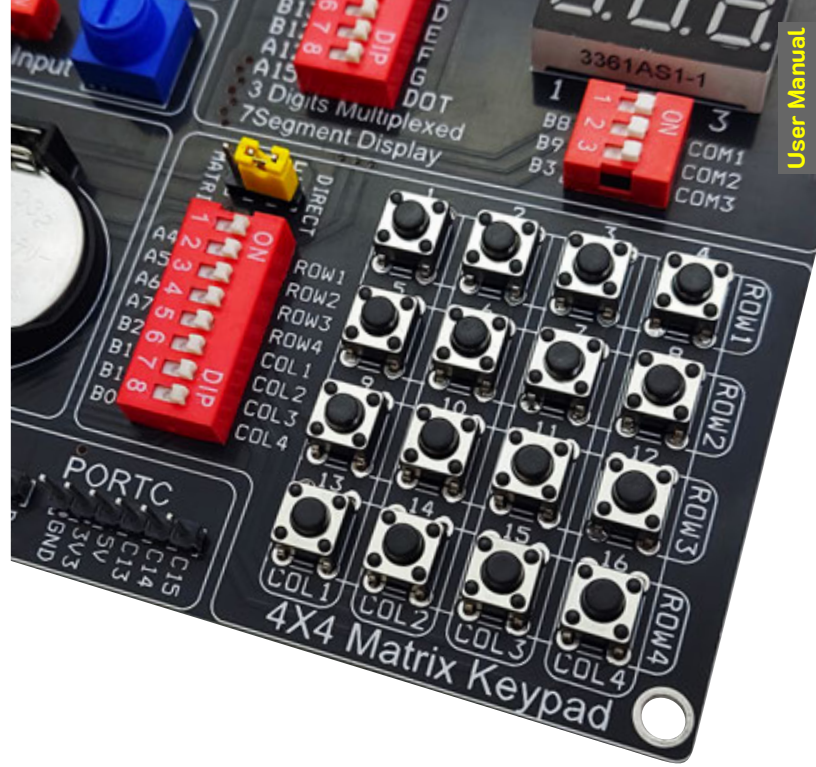

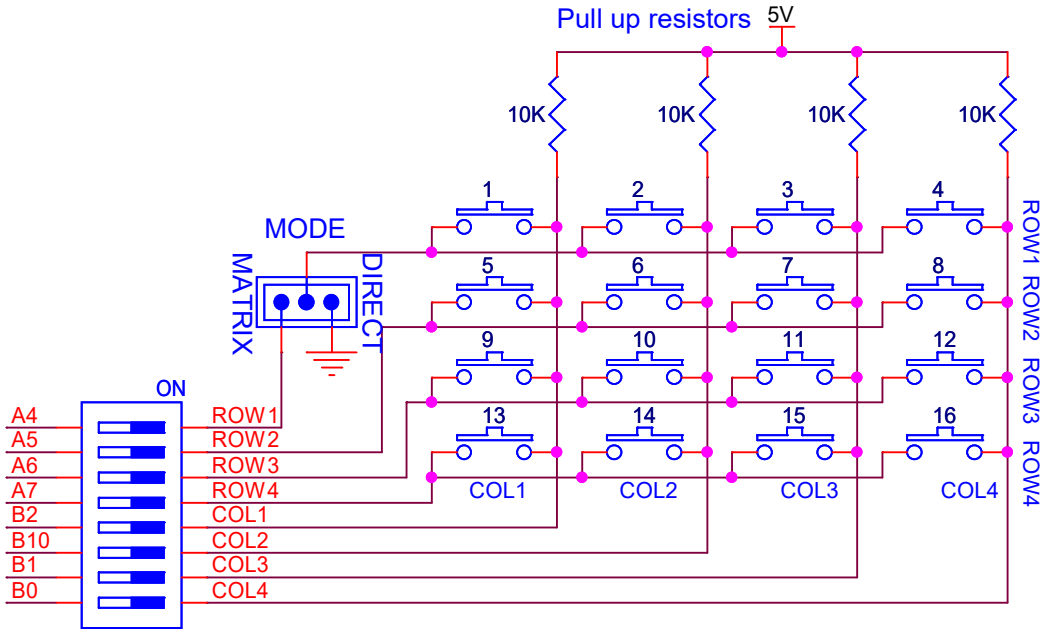

FARES PCB

Direct Mode

To configure keypad operation for direct mode, just set the MODE jumper to Direct position to assert a 0V level on the first row thus enabling switches 1,2,3 and 4. so that, these switches can be read directly as inputs through column lines that are pulled up by 10KΩ resistors. If a column line goes low, it means a switch is pressed otherwise, it is considered released.

Direct mode configuration saves microcontroller I/O ports and reduces code size where no need for more than four switches.

Activated switches are connected to microcontroller as shown in table below:

Switch	MCU pins
SW1	B2
SW2	B10
SW3	B1
SW4	B0

Direct mode configuration

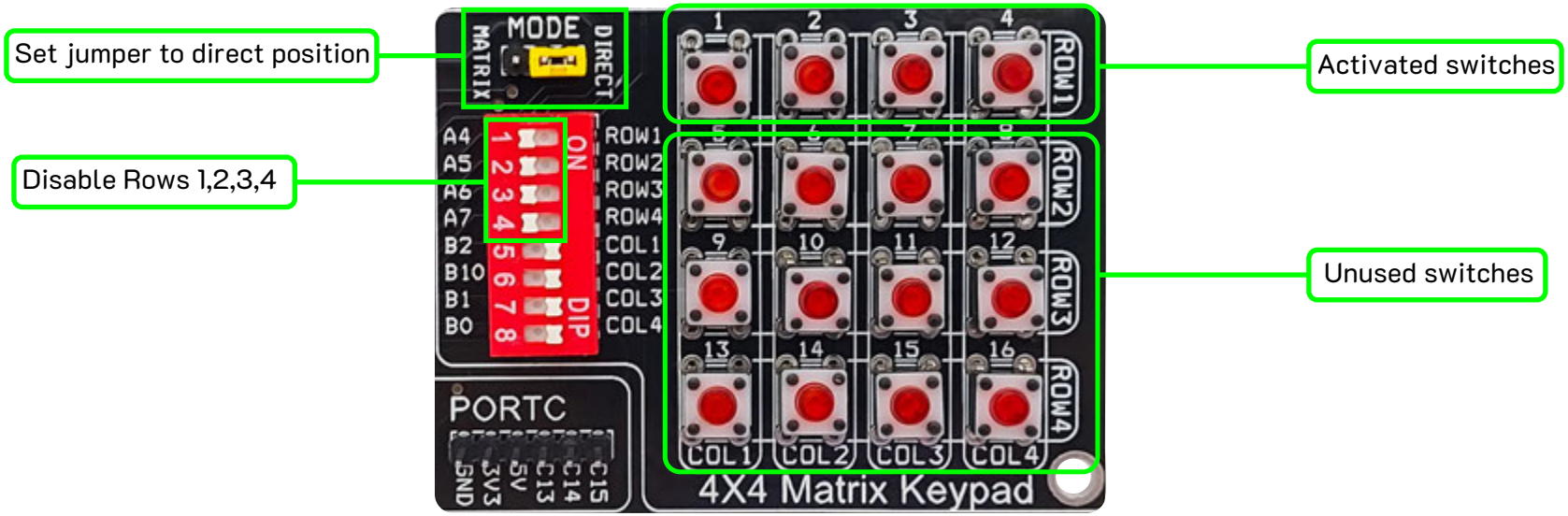

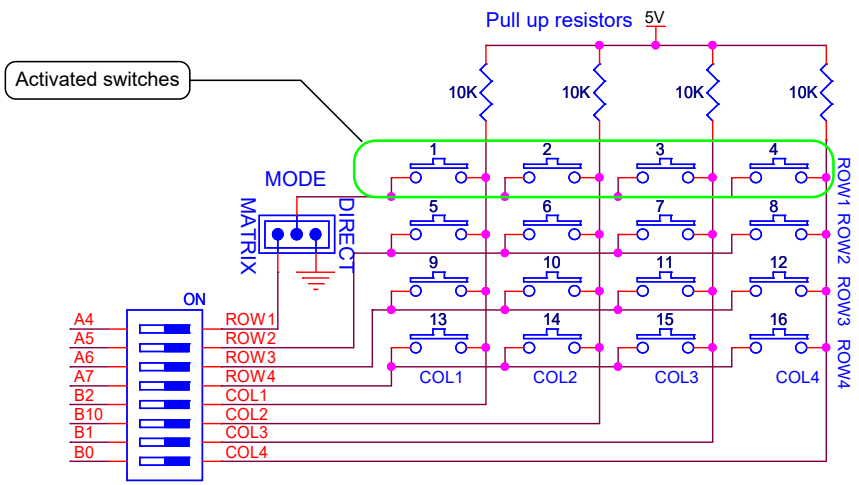

Simplified keypad circuit diagram (direct mode)

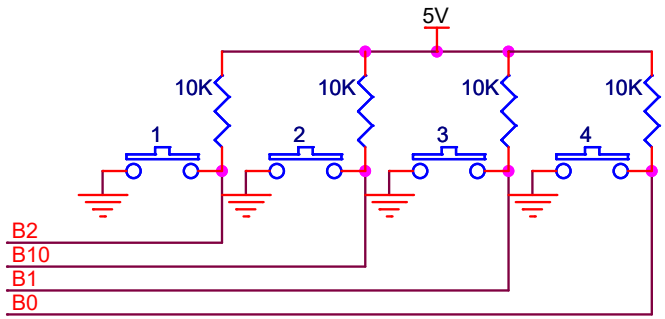

Matrix Mode

All 16 switches are activated and configured as four row lines and four column lines. Microcontroller scans these lines to detect a pressed button. Column lines are pulled up by 10KΩ resistors. (i.e. microcontroller port pin reads high if no switch is pressed). Scan operation starts by setting all rows and columns as inputs. To scan switches in a row, microcontroller configures it as output and initiates it to low, then checks columns one at a time. If a column line goes low, microcontroller detects a pressed switch otherwise, no pressed switch is detected in this row hence, it goes to scan next row and, so on.

Rows and columns are connected to microcontroller as shown in table

Switch	MCU pins
ROW1	A4
ROW2	A5
ROW3	A6
ROW2	A7
COL1	B2
COL2	B10
COL3	B1
COL4	B0

Matrix mode configuration

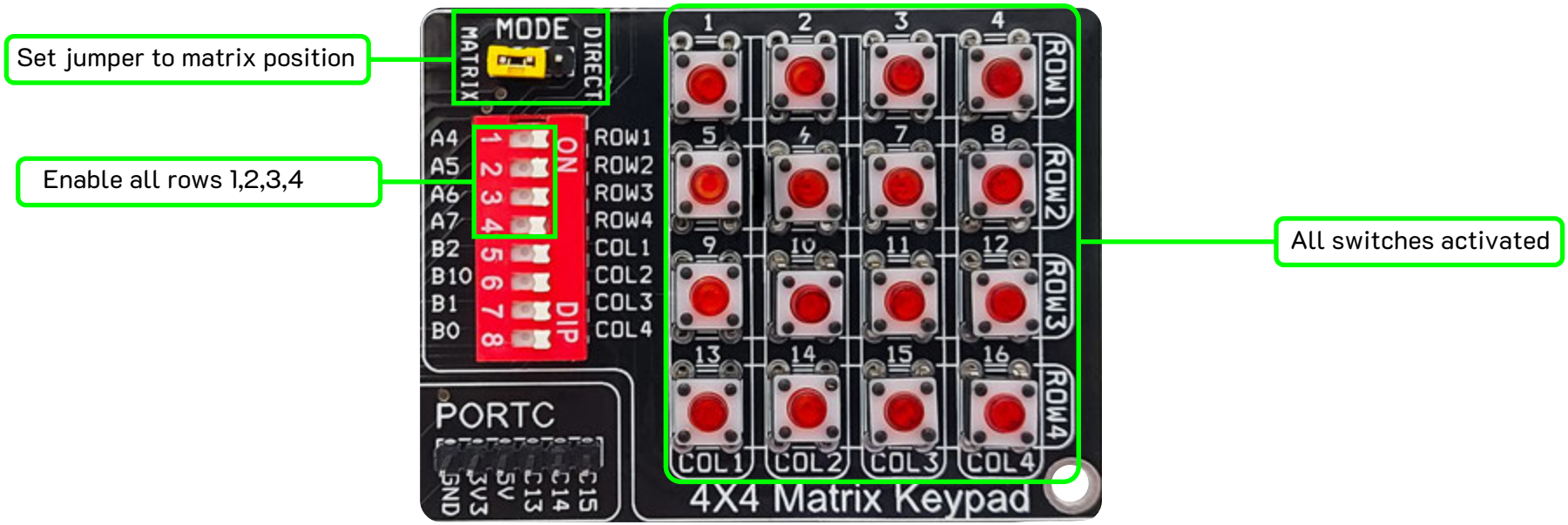

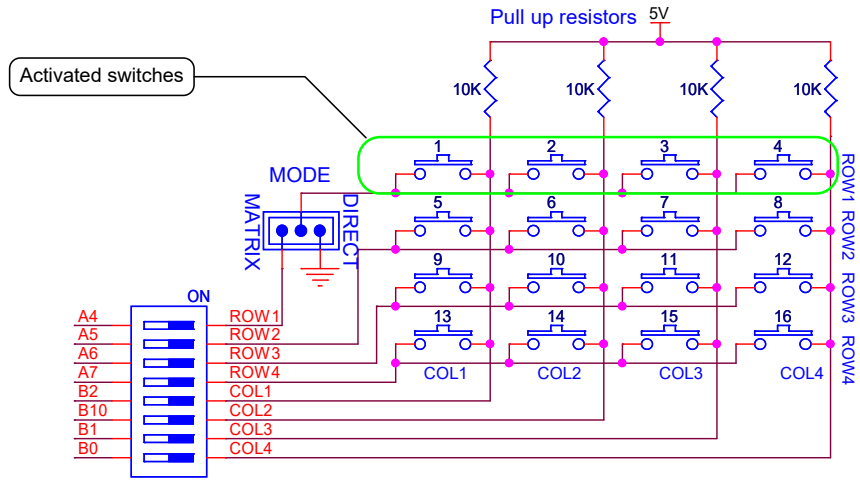

FARES PCB

General Outputs

Panda+ kit provides a set of simple general outputs useful for biginners

- Five output LEDs Red1, Red2, Green, Blue, and Yellow.
- Two output relays REL1 and REL2 (10A).
- One output Buzzer (5V).

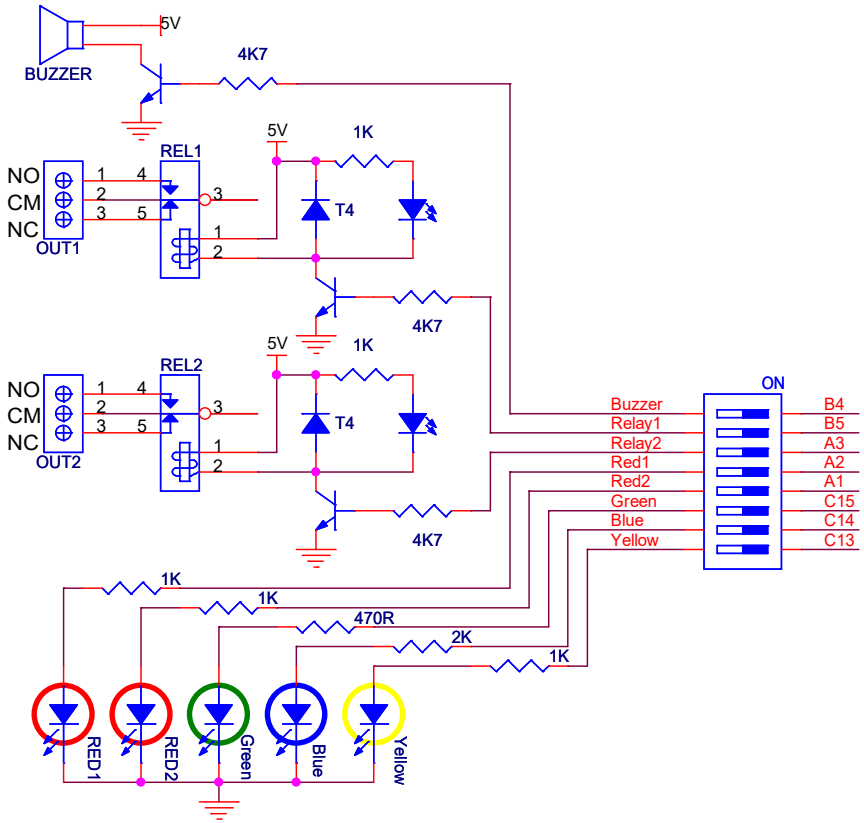

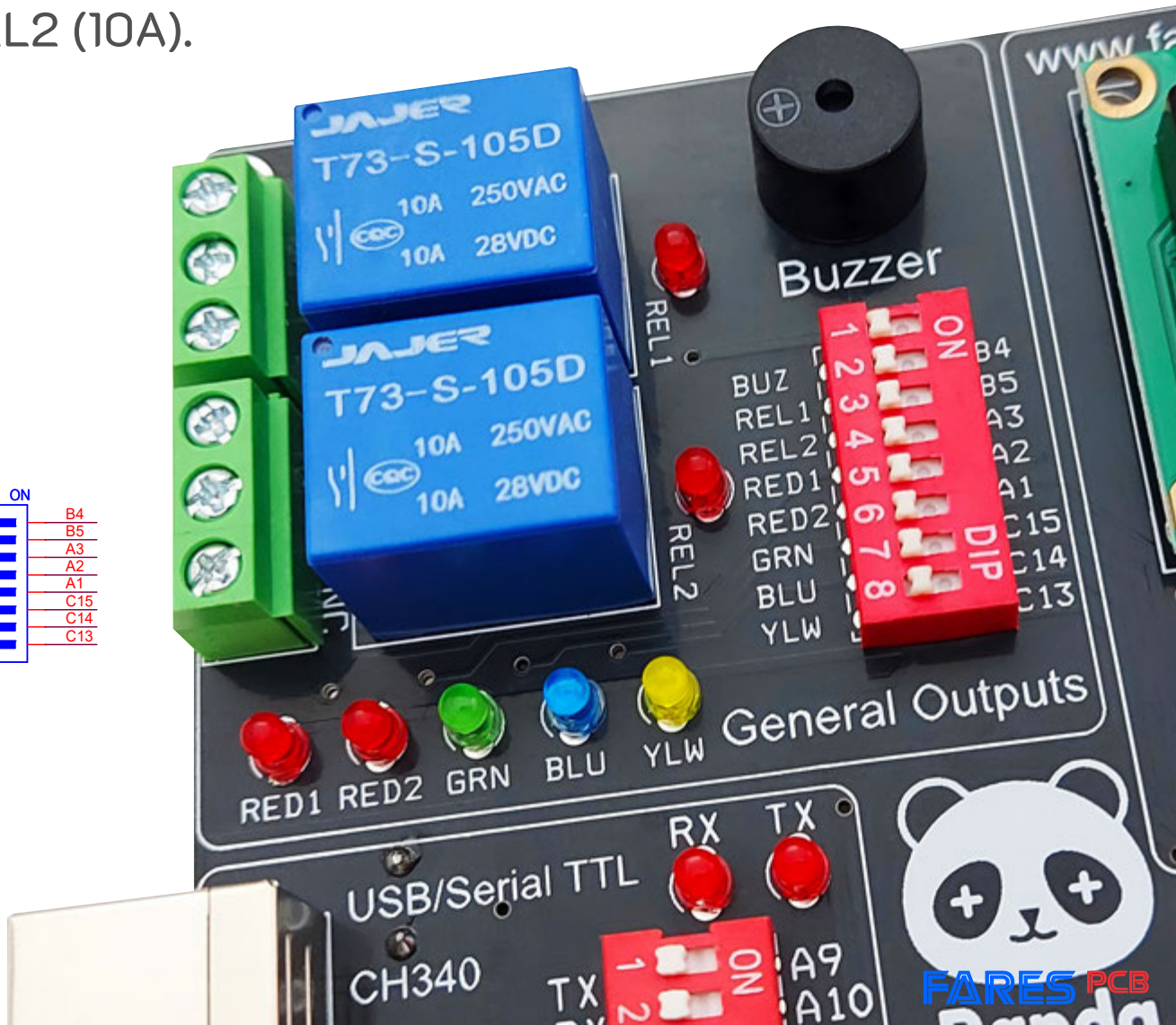

Output LEDs

Five LEDs (Red1, Red2, Green, Blue and Yellow) with current limiting resistors are driven by µC pins A2, A1, C15, C14, and C13 respectively. LEDs are active high. i.e. output high turns LED on. Each LED can be individually enabled via DIP switch.

Output Relays

Panda+ kit is equiped with two output relays, which are suitable for AC or DC switching applications. Each relay has its own LED status indicator and can be individually enabled via DIP switch. Relays are driven by NPN transistors. Freewheeling diodes are included to protect transistors from back EMF voltage that arises on relay coil during switching off. Relay1 and Relay2 are driven by µC pins B5 and A3 respectively. Relays are 5V coil and rated up to 10A contacts (resistive load). Both normally open and normally close contacts are brought out via screw terminals.

Output Buzzer

One output buzzer (5VDC) is driven by an NPN transistor and connected to µC pin B4. Also, It can be enabled via DIP switch.

7-Segment Display

7-segment diplay is very popular and has many applications. It is used to indicate numerical data. It can display digits from 0 to 9 and some characters such as A, b, C, H, E, F ,etc.

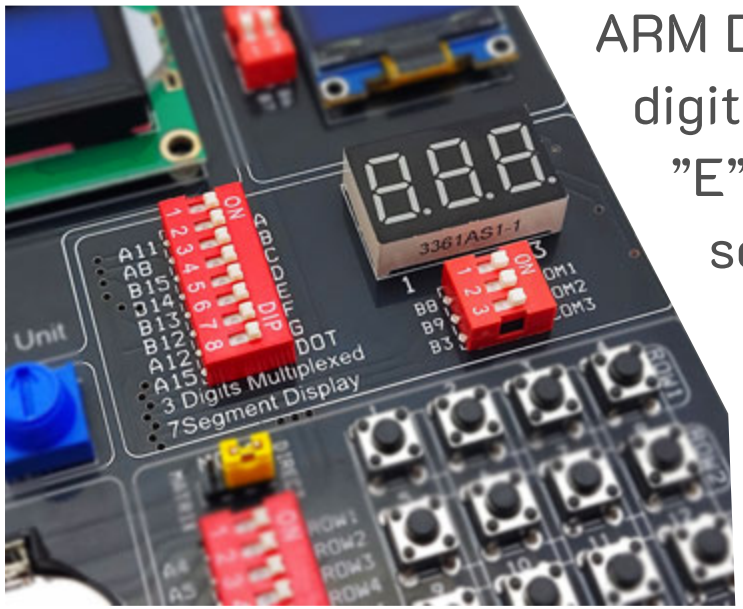

ARM Development Kit provides three multiplexed 7-segment digits. Segments are referred to by letters “A”, ”B”, ”C”, ”D”, ”E”, ”F”, ”G”, and ”DOT”. All digits share the same segment. i.e. segment “A” of DIG1, DIG2, and DIG3 are wired together and driven by the same µC pin. Each digit has its own common cathode which is driven by an NPN transistor. So, a high logic from microconroller turns transistor on, which in turn enables the digit.

Each 7seg digit can be enabled or disabled individually using three way DIP switch.

Segments and commons are mapped to microcontroller as shown in tables below:

Segment	MCU pins
A	A11
B	A8
C	B15
D	B14
E	B13
F	B12
G	A12
DOT	A15

Common	MCU pins
COM1	B8
COM2	B9
COM3	B3

3-Digits Multiplexed 7-Segment Display

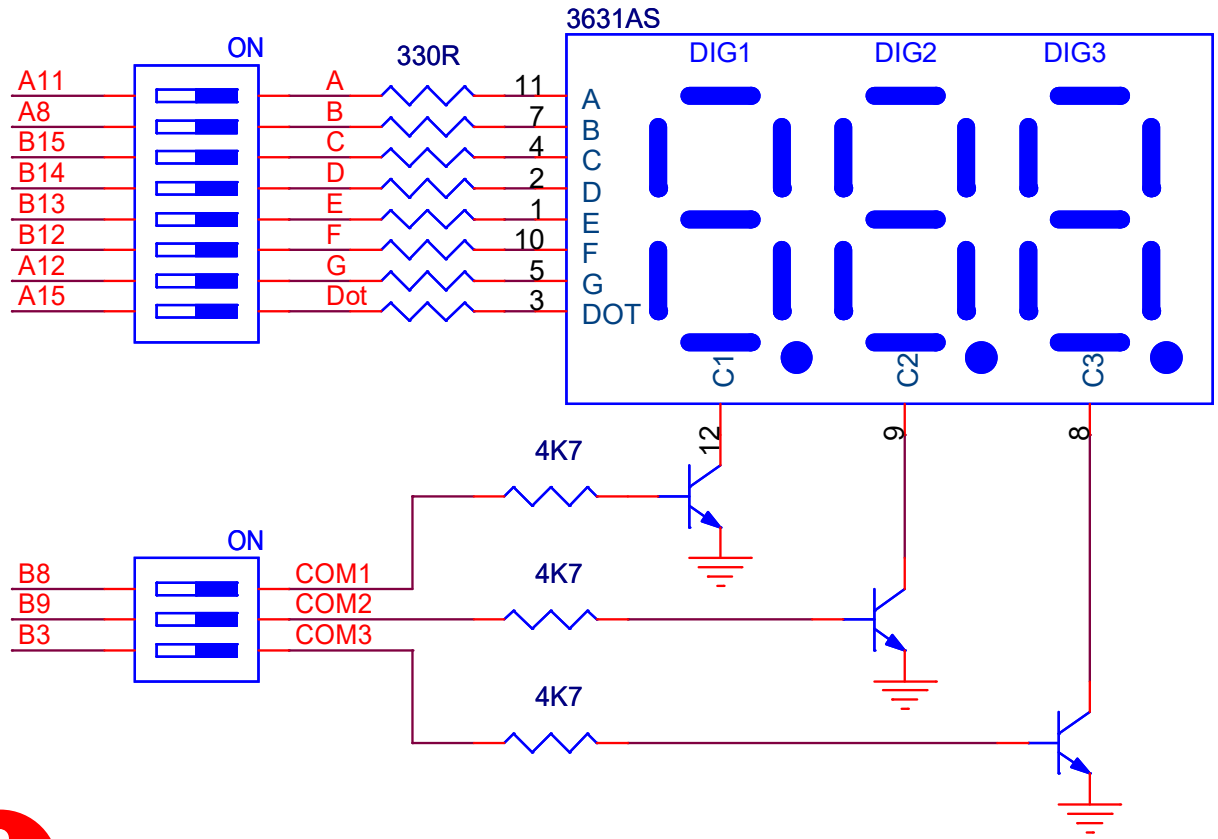

7segment and LCD modules share the same µC port. So, disable LCD before using 7Segment display.

2X16 LCD Display

LCD is a very popular electronic display module used in an extensive range of applications such as calculators and printers.

It is inexpensive, simply programmable, and has no limitations for displaying custom characters.

LCD Connector pinout is shown in table

LCD Pin No	LCD Pin Name	Function
1	VSS	Ground
2	VCC	5+V
3	VO	Contrast
4	RS	Register Select
5	R/W	Read/Write
6	EN	Enable
7	D0	Data bit 0
8	D1	Data bit 1
9	D2	Data bit 2
10	D3	Data bit 3
11	D4	Data bit 4
12	D5	Data bit 5
13	D6	Data bit 6
14	D7	Data bit 7
15	A	Back light anode (+)
16	B	Back light cathode (-)

- LCD R/W control is tied to ground.
- 10KΩ potentiometer denoted by "Contrast" is used to adjust the LCD contrast.

LCD is connected to microcontroller as shown in table below:

LCD pin	MCU pins
RS	A11
EN	A8
D4	B15
D5	B14
D6	B13
D7	B12

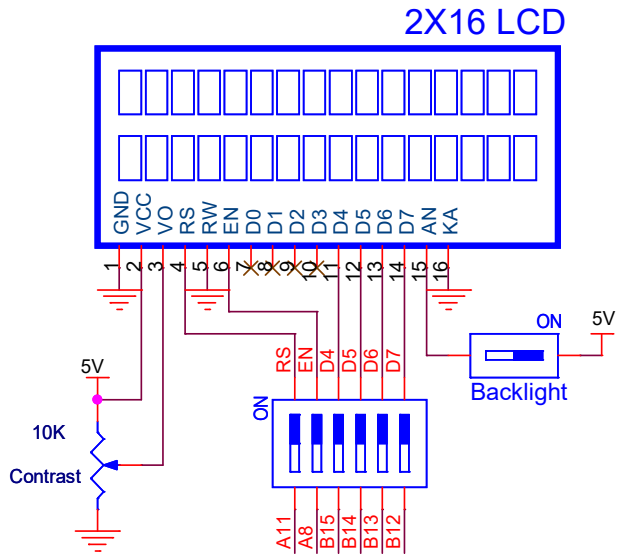

LCD and 7segment modules share the same µC port. So, disable 7segment display (turn off COM1, COM2, and COM3) before using LCD.

OLED Display

OLED display is more efficient than other displays. It doesn't require backlight, which results in a high contrast in the dark. Additionally, its pixels consume energy only when they are on, so the OLED display consumes less power.

Panda+ Kit provides 128X64 monochrome 0.96 inch OLED display (SSD1306). It has only four pins and communicates with microcontroller using I^2C protocol. Operating voltage ranges from 3.3V to 5V.

I^2C bus needs pull up resistors. Both on SDA and SCL lines. OLED display has its own 10K ohm internal pull-up resistors (Lines pulled up to 3.3V). So, There is no need for using external pull-up resistors.

OLED display is connected to microcontroller as shown in table below

OLED pin	MCU pins
SCL	B6
SDA	B7

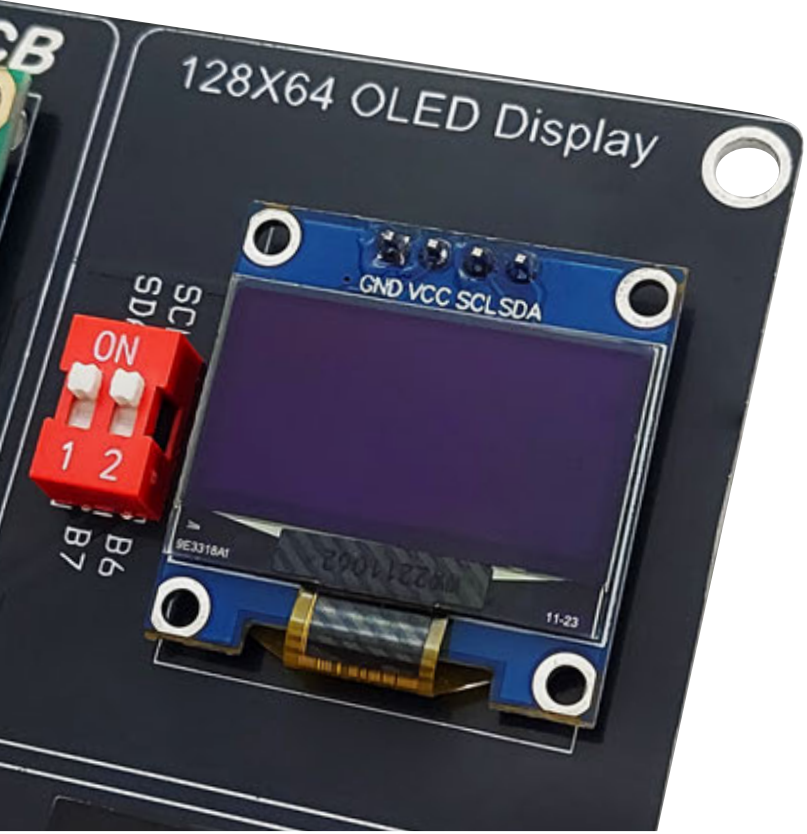

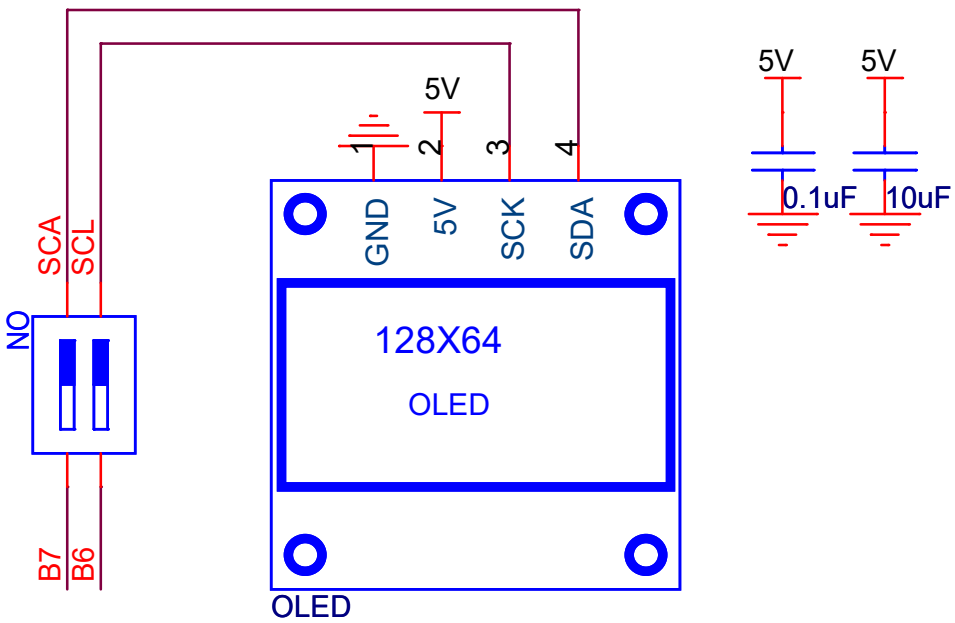

OLED Diplay module pull up the I²C bus lines to 3.3V through internal 10K ohm resistors. If OLED is disconnected (DIP switch is turned off) then external pull-up resistors are required to use I²C interface.

Analog Input

Panda+ kit provides a variable analog input 0~3.3V through a 10Kohm high precision potentiometer. Fixed terminals are connected to the power rails (GND and 3.3VDC) through an LC filter to eliminate power supply noise, and the variable terminal is routed to µC pin A0 via DIP switch. The variable resistor can be precisely adjusted to a potential value in the range from 0.00V to 3.30V.

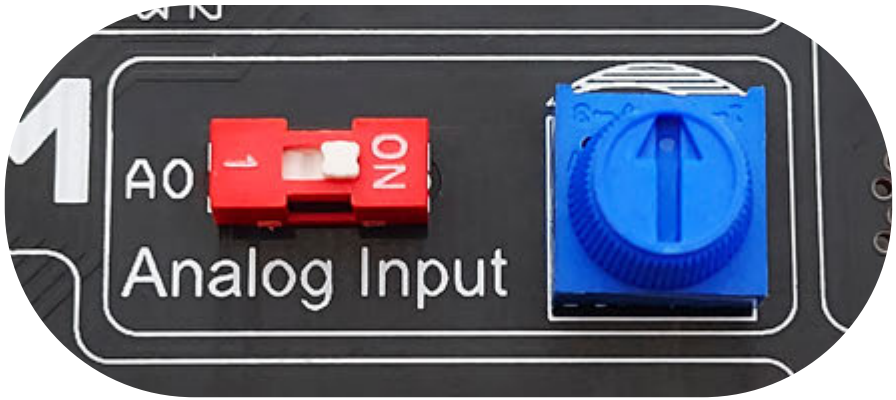

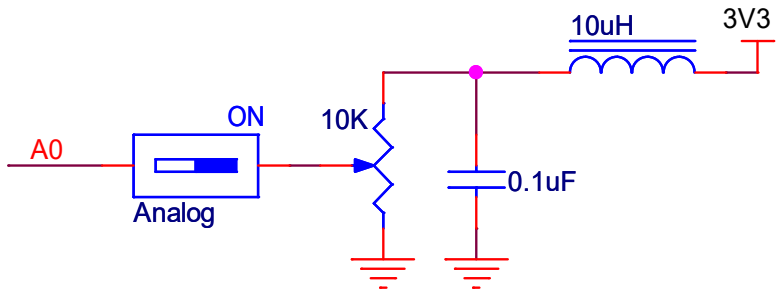

FARES PCB

USB Virtual Serial COM

Panda+ kit can be interfaced with the host computer over the USB-B connector. This unit contains USB to serial converter (CH340). CH340 is connected to RX, TX of the microcontroller internal UART peripheral through pins A10 and A9, which can be enabled individually via DIP switch. Two red LED included to indicate serial transmitting and receiving activity.

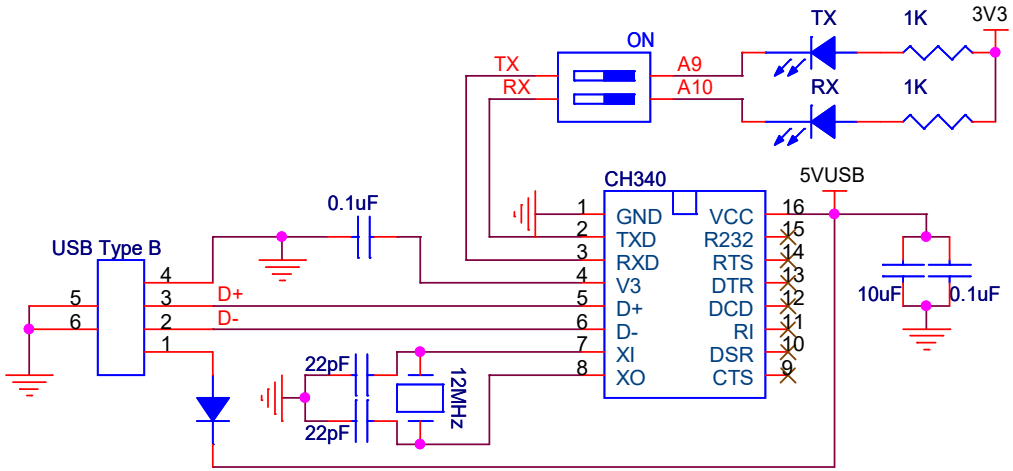

FARES PCB

I/O Ports

Panda+ kit offers interfacing with external devices and peripherals. All GPIOs available in Black Pill module are brought out for external usage via headers. They are positioned at the lower side of the kit, so they can be easily accessed. The pins on these headers are labeled according to the names of the µC pins to which they are routed. Pin header connectors are grouped into three ports. Each represents one microcontroller port, in addition to power rails 5V, 3.3V, and GND to supply external circuits. Pin headers can be used to expand the connectivity of your **Panda+** kit.

Choose your Development Environment

Now after you get your **Panda+** Kit, you own a hardware platform to be ready for taking your first step toward ARM-based embedded systems development world.

There are many development environments to work with STM32 MCUs such as STM32CubeIDE, Keil MDK-ARM, SEGGER Embedded Studio, and IAR Embedded Workbench. Of course, you can choose any of them according to your desire and preferences. But we recommend starting with STM32CubeIDE.
STM32CubeIDE is a free licensed complete development system to develop code for almost all STM-32 Based microcontrollers from ST Microelectronics. It's an advanced C/C++ development platform with great features that includes peripheral configuration, code editing, code compilation, and debugging.

you can download STM32CubeIDE from this link
https://www.st.com/en/development-tools/stm32cubeide.html

Debugging and Programming

After developing and building your project, you will need to upload it to MCU.

Panda+ kit comes with ST-Link V2 . It is an in-circuit debugger and programmer for STM32 microcontrollers.

ST-LINK uses either single-wire interface module (SWIM) or JTAG/serial wire debugging(SWD) to communicate with microcontroller. Black Pill module offers SW signals for debugging/programming. Connect the Black Pill to ST-LINK as shown in picture and table

Black Pill	ST_LINK
GND	6 (GND)
SWCLK	2 (SWCLK)
SWIO	4 (SWDIO)
3V3	8 (3.3V)

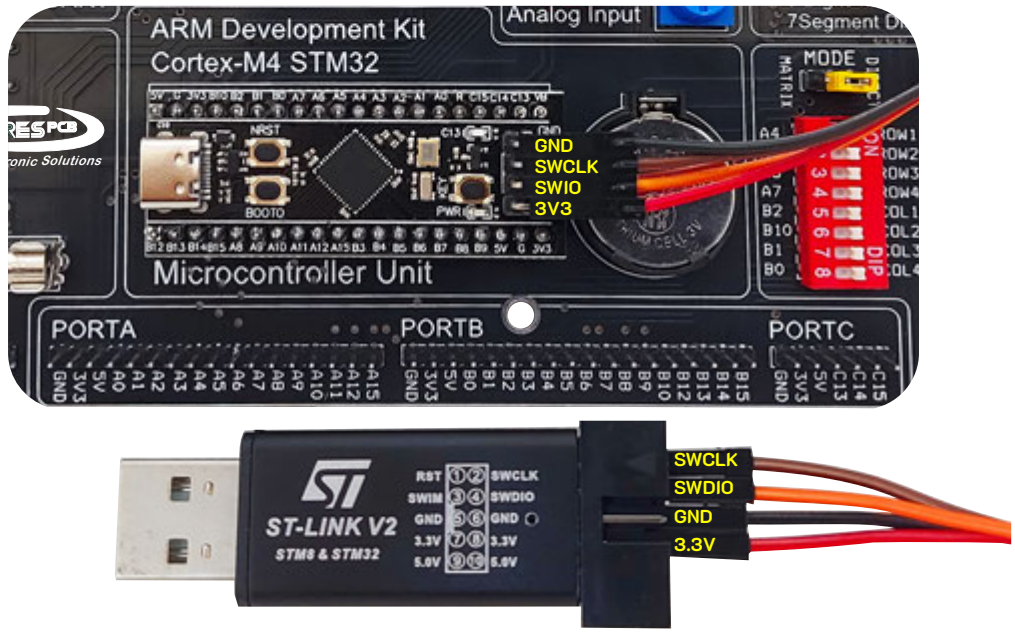

To upload your code, you can use STM32CubeProgrammer from STMicroelectronics. It provides an easy-to-use and efficient environment for reading, writing, and verifying device memory.

STM32CubeProgrammer Features

- Erases, programs, views, and verifies the content of the device Flash memory
- Supports Motorola S19, Intel HEX, ELF, and binary formats
- Supports debug and bootloader interfaces
- Automates STM32 programming (erase, verify, programming, configuring option bytes)
- Supports the programming and configuring of option bytes
- Multi-OS support: Windows® , Linux® , macOS®

you can download STM32CubeProgrammer from this link
https://www.st.com/en/development-tools/stm32cubeprog.html

Once STM32CubeProgrammer is installed along with driver software, it is very easy to use

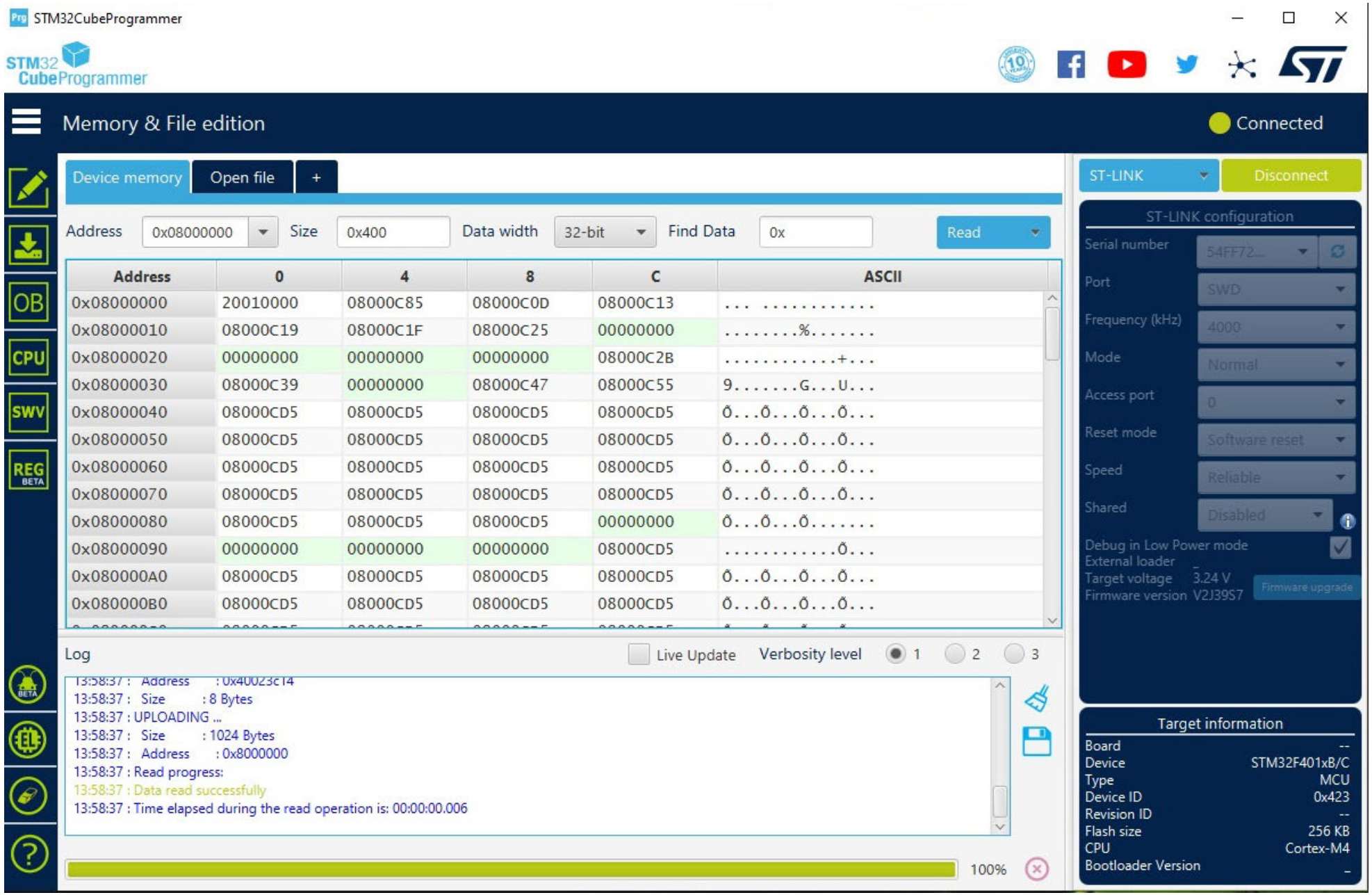
STM32CubeProgrammer
STM32 CubeProgrammer
Memory & File edition
Connected
Device memory
Open file
+
Address 0x08000000
Size 0x400
Data width 32-bit
Find Data 0x
Read
Address 0 4 8 C ASCII
0x08000000 20010000 08000C85 08000C0D 08000C13 ... .
0x08000010 08000C19 08000C1F 08000C25 00000000 .....%.....
0x08000020 00000000 00000000 00000000 08000C2B .....+...
0x08000030 08000C39 00000000 08000C47 08000C55 9.....G...U...
0x08000040 08000CD5 08000CD5 08000CD5 08000CD5 Õ...Õ...Õ...Õ...
0x08000050 08000CD5 08000CD5 08000CD5 08000CD5 Õ...Õ...Õ...Õ...
0x08000060 08000CD5 08000CD5 08000CD5 08000CD5 Õ...Õ...Õ...Õ...
0x08000070 08000CD5 08000CD5 08000CD5 08000CD5 Õ...Õ...Õ...Õ...
0x08000080 08000CD5 08000CD5 08000CD5 00000000 Õ...Õ...Õ.....
0x08000090 00000000 00000000 00000000 08000CD5 .....Õ...
0x080000A0 08000CD5 08000CD5 08000CD5 08000CD5 Õ...Õ...Õ...Õ...
0x080000B0 08000CD5 08000CD5 08000CD5 08000CD5 Õ...Õ...Õ...Õ...
Log
Live Update
Verbosity level 1 2 3
13:58:37 : Address : 0x40023c14
13:58:37 : Size : 8 Bytes
13:58:37 : UPLOADING ...
13:58:37 : Size : 1024 Bytes
13:58:37 : Address : 0x8000000
13:58:37 : Read progress:
13:58:37 : Data read successfully
13:58:37 : Time elapsed during the read operation is: 00:00:00.006
100%
ST-LINK
Disconnect
ST-LINK configuration
Serial number 54FF72...
Port SWD
Frequency (kHz) 4000
Mode Normal
Access port 0
Reset mode Software reset
Speed Reliable
Shared Disabled
Debug in Low Power mode
External loader
Target voltage 3.24 V
Firmware version V2J39S7
Firmware upgrade
Target information
Board --
Device STM32F401xB/C
Type MCU
Device ID 0x423
Revision ID --
Flash size 256 KB
CPU Cortex-M4
Bootloader Version -

FARES PCB

Tips before first use

If it is the first time to use kit or need to make sure of the validity of kit sections, It is a good decision to test all kit parts before uploading your own application.
Panda+ kit comes preprogrammed with a comprehensive test code for all kit sections.
If **Panda+** kit is not programmed with the test code, you can download it from the below link
https://fares-pcb.com/product/arm-development-kit-panda-2/

Use the STM32CubeProgrammer to upload the test code to kit as previously described

Connect **Panda+** kit to PC via USB type B socket and enable DIP switches of all sections on kit. Turn on the power switch located in PSU (denoted by POWER SW).
on powering on kit either from DC adaptor or USB socket, You can start testing immediately after the next messages are displayed successively on LCD

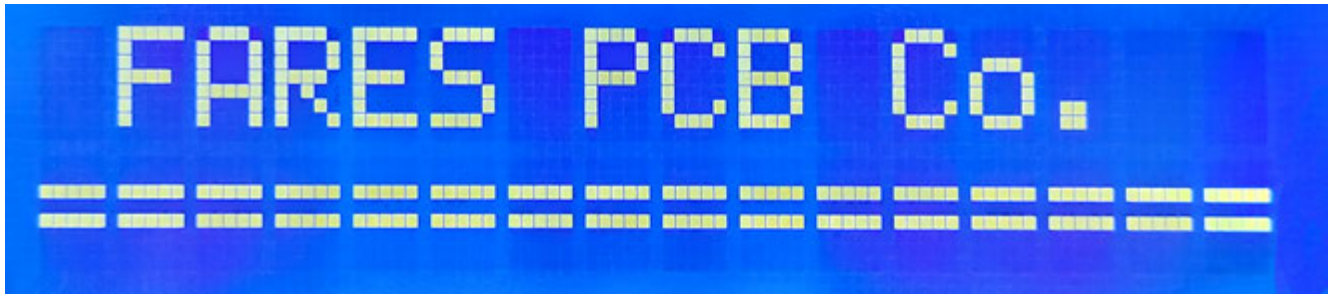
FARES PCB Co.

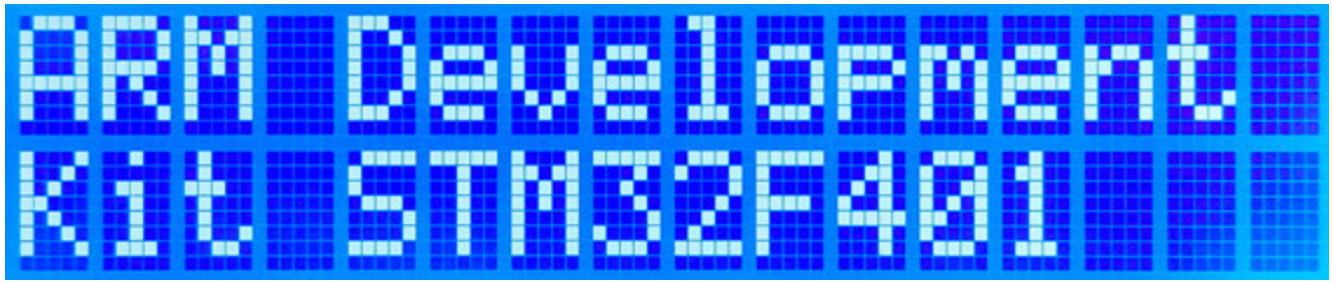
ARM Development
Kit STM32F401

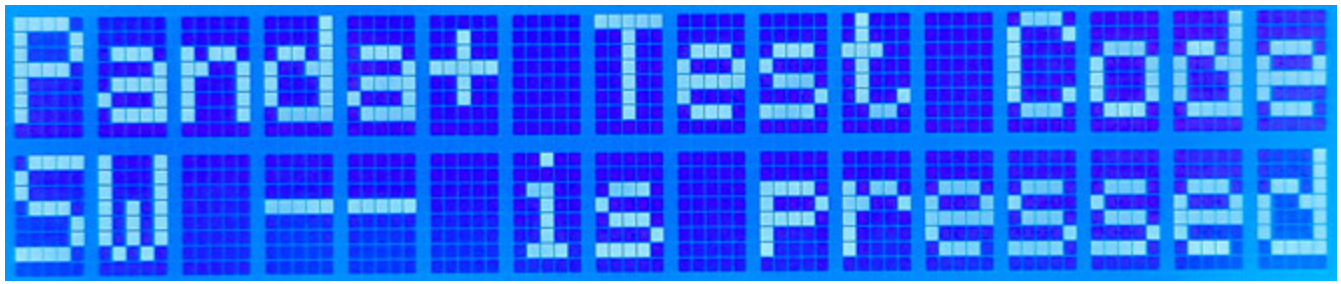
Pandat Test Code
SW -- is Pressed

Test Operaion

Some switches perform a test operation for specified modules in kit. If a switch is pressed, the microcontroller sends a message to the serial port containing the pressed switch number and simultaneously LCD displays the same message as the below one

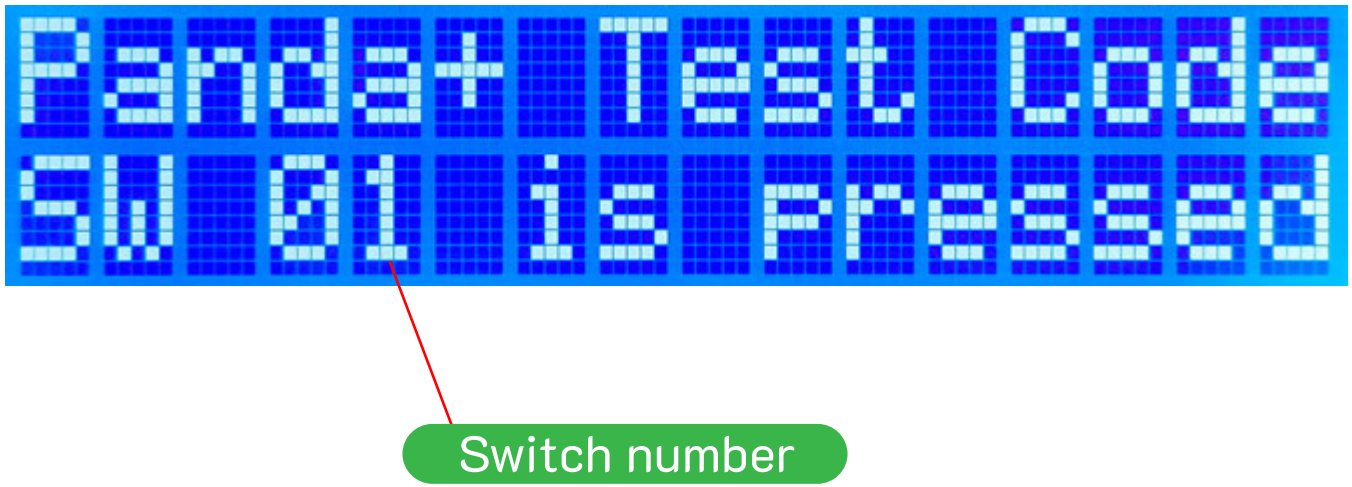

The next table shows the test operation of each switch and LCD message is displayed.

Switch	LCD Message	Test Operation
1	Switch 01 is pressed	Toggle Relay1 (REL1)
2	Switch 02 is pressed	Toggle Relay2 (REL2)
3	Switch 03 is pressed	Toggle Red1 LED (RED1)
4	Switch 04 is pressed	Toggle Red2 LED (RED2)
5	Switch 05 is pressed	Toggle Green LED (GRN)
6	Switch 06 is pressed	Toggle Blue LED (BLU)
7	Switch 07 is pressed	Toggle Yellow LED (YLW)
8	7-Seg Testing	Each 7 segment display digit counts from 0 to 9 then apply auto reset
9	Analog Testing	LCD displays the analog voltage measured on port pin (PA0)
10	Serial Testing	The received text via the serial port is shown on LCD (115200bps)
11	Switch 11 is pressed	---
12	Switch 12 is pressed	---
13	Switch 13 is pressed	---
14	Switch 14 is pressed	---
15	Switch 15 is pressed	---
16	Switch 16 is pressed	---

We developed some example projects under the STM32 environment to test **Panda+** kit sections separately. It is a good choice to download them from this link

https://fares-pcb.com/product/arm-development-kit-panda-2/

open example projects using STM32CubeIDE and upload to test

For our full range of products, see our website at **http://www.fares-pcb.com**
If you have any technical questions about our products,
e-mail us at **www.support@fares-pcb.com**

FARES PCB co. (Head office)
32 El-Falaky st, Bab El-Louq, Tahrir, Cairo, Egypt.
Tel: +202-27901841
Mob: +201022457902

FARES PCB Co reserves the right to make changes in circuit design, software and/or specifications at any time without prior notice. For the latest updated information, please visit our website at http://www.fares-pcb.com.

Information furnished by is believed to be accurate and reliable. However, **FARES PCB** assumes no responsibility arising from the use of the specifications described.

Distributor:
RAM Electronics
32 El Falaky St. Bab El Louk, Tahrir, Cairo, Egypt
Tel: +202-27960551
www.ram.com.eg
Sales@ram-electronics.com.

RAM® Electronics
INTEGRATED SOLUTIONS AT ONE PLACE

Copyright © 2024 by FARESPCB