JXK-21 Voltge Transucer

1. Input overload protection
2. Output overcurrent limit protection
3. Output current short-circuit protection
4. Wide power supply
5. Power reverse protection
6. Light weight, easy to install
7. High precision, high linearity
8. Low temperature drift, frequency band
9. Fast response, strong anti-interference ability

Product Overview

Voltage transmitter is a device that converts large voltage signals from the field into standard process signals, RS485 signal output, and is used to measure DC/AC voltage signals in industrial sites.

DIN rail independent mounting.

Product Parameter

Installation method: Standard guide rail (35mm)

Original measurement range: AC/DC 0~1500V

Rated output :0-5V, 0-10V, DC4-20mA, DC0-20mA, RS485 specified by the user

Load capacity :5mA

Linearity :0.5%

Accuracy :1%

Isolated voltage :2.5kV/50Hz, 1Min

Temperature drift :<500PPM/°C

Band width :DC~20KHZ

DI/DT Follow :>50A/uS

Consumption current :10mA+ output current

Response time :<200ms

Operating temperature :-10°C~+70°C

Storage temperature :-25°C~+85°C

Power supply :DC24V

Product Size

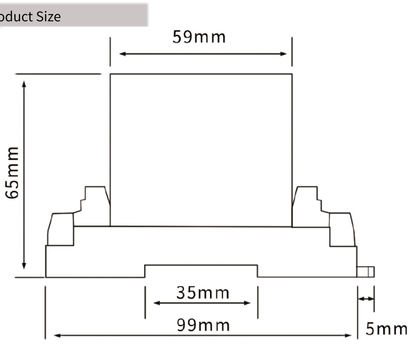

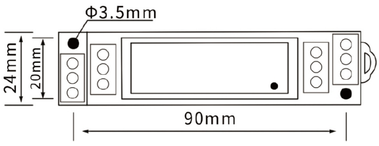

Product Wire

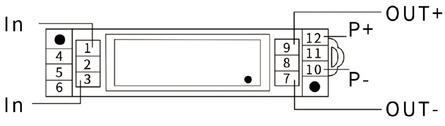

DC Voltage Input

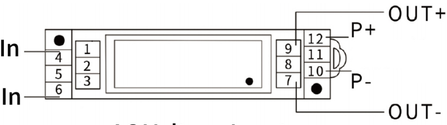

AC Voltage Input

AC Votlage Input RS485 Output

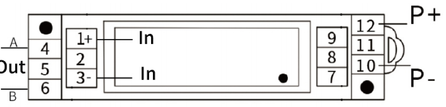

DC Voltage Input RS485 Output

▶ The power supply must be connected in strict accordance with the wiring diagram.

Installation precautions

1. Before using the signal isolator, carefully check and confirm the quantity, model and specification of the product according to the packing list and product label
And carefully read the signal isolator instruction manual.
2. The use environment of the signal isolator should be free from conductive dust, corrosive gas, strong shock and vibration.
3. Signal isolator integrated structure, non-removable, while collision and fall should be avoided, do not alter and tear off the product
Any of the labels.
4. The signal isolator cannot be used instead of the isolated safety gate at the analog detection end.
5. When the signal isolator is installed centrally, the installation spacing is usually >10mm.
6. Usually, there is no lightning protection circuit set inside the signal isolator, when the input and output feeders of the product are exposed to outdoor harsh rings
When in the environment, take lightning protection measures, such as installing a lightning arrester on the signal cable.
7. When using, wiring must be strictly in accordance with the wiring method in the instruction manual, and then switch on the power and signal after checking.