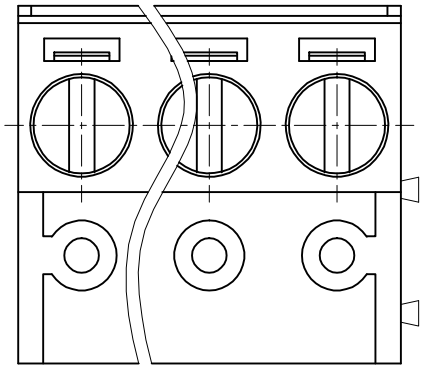

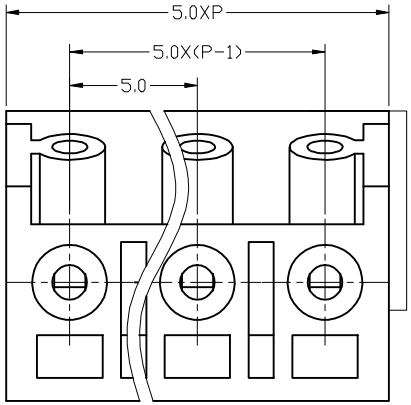

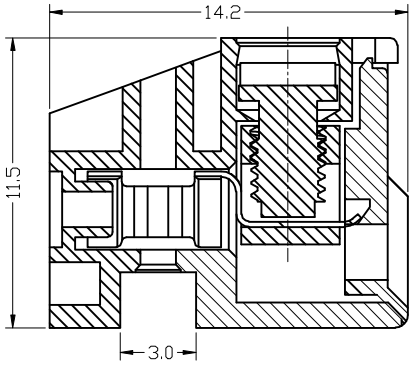

300V 10A 30-16AWG 1.5mm^2

Poles: 2P&3P-24P

Pitch: 5.0mm

Materials

Housing: PA66(UL 94V-0)

Clamp: Phosphor Hronze

Wire Cage: Brass,Tin Plated

Screw: M2.5,Steel(A3),Zinc Plated

Torque: 0.4N.m

设计/Designed by	绘图/Drawing by	审核/Checked by	批准/Approved by	未注公差 General Tolerance
				x. ±0.2 x.° ±2° .x ±0.1 .x° ±1° .xx ±0.05 .xx°±0.5° .xxx ±0.01
新莱亚电子 XINLAIYA ELECTRONIC CO.,LTD		图名/Title: XY332W-5.0	文件编号/File No.	
			页序/Sheet	
		备注/Remark		单位/Units: mm

序号/RevNo.	更改记录/Revision note	签名/Signature	日期/Date